Current in Circuits

Exam code: 0625 & 0972

Download PDF

Written by: Lindsay Gilmour
Reviewed by: Caroline Carroll
Updated on 1 October 2024

SaveMyExams

Did this video help you? Yes No

Current in series circuits

What is a series circuit?

- A series circuit contains a **single** complete loop

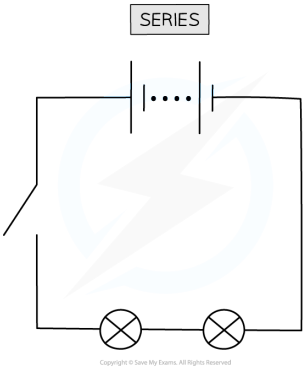

In this circuit, the switch, battery and both lamps are in a single loop, making it a series circuit

Current in a series circuit

- In a series circuit, the current is the **same value at any point**

Help me understand

Stuck on something?
Ask questions and get help with exactly what you're revising.
Got it

- This means that **all** components in a closed-loop have the same current

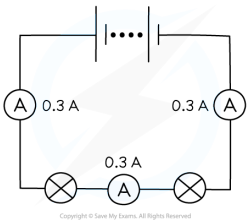

The current is the same at each point in a series circuit

Factors affecting current in a series circuit

- The amount of current flowing around a series circuit depends on two things:
  - The **voltage** of the power source
  - The **resistance** of the components in the circuit
- **Increasing** the **voltage** of the power source drives **more current** around the circuit
  - So, decreasing the voltage of the power source reduces the current
- **Increasing** the **number** of components in the circuit **increases** the **total resistance**
  - Hence **less current** flows through the circuit

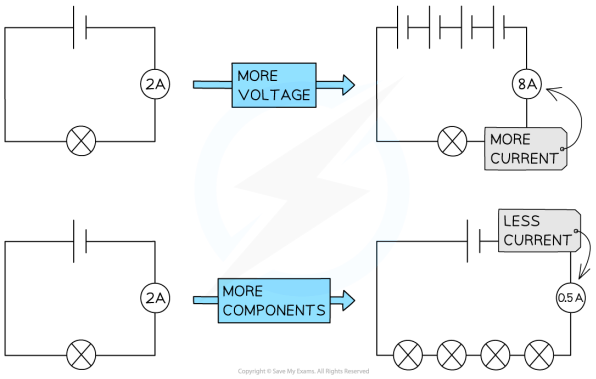

Current will increase if the voltage of the power supply increases, and decreases if the number of components increases (because there will be more resistance)

Current in parallel circuits

What is a parallel circuit?

- A parallel circuit consists of multiple loops containing circuit components

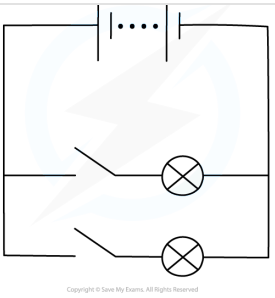

The bulbs are each in a separate loop in this circuit, making it a parallel circuit

What is the rule for current in a parallel circuit?

- In a parallel circuit, the current **splits** along each **branch** at a junction
  - Some of it goes down one branch and the rest goes down the other
- This means that the current from the source is **larger** than the current in each branch

Lighting circuits

- A lighting circuit is used to supply power to multiple light sources
  - Office lights are a common example, as multiple identical bulbs must have the same brightness
- Lighting circuits are constructed in **parallel** because:
  - Bulb's all have the same potential difference and therefore the same brightness
  - If one bulb breaks, the rest continue to function as current passes along each branch independently
  - This also means lamps can be switched off and on individually without breaking the whole circuit

Calculating current in parallel circuits

Extended Tier Only

- The current **before** a junction is equal to the **sum** of currents along each branch **after** the junction

Current from the power supply (4 A) is split along each branch (2 A). These current combine again at the other side

- At a **junction** in a **parallel circuit** (where two or more wires meet) the current is **conserved**
  - This means the amount of current flowing into the junction is equal to the amount of current flowing out of it
- This is because **charge** is conserved
- Note that the current does not always split equally – often there will be more current in some branches than in others
  - The current in each branch will only be identical if the **resistance** of the components along each branch are **identical**
- Current behaves in this way because it is the **flow of electrons**:
  - Electrons are physical matter – they cannot be created or destroyed
  - This means the total number of electrons (and hence current) going around a circuit must remain the same
  - When the electrons reach a junction, however, some of them will go one way and the rest will go the other

Current is split at a junction into individual branches

Worked Example

In the circuit below, ammeter A_0 shows a reading of 10 A, and ammeter A_1 shows a reading of 6 A.

What is the reading on ammeter A_2?

Answer:

Step 1: Recall that at a junction, the current is conserved

- This means that the total amount of current flowing into a junction is equal to the total amount flowing out

Step 2: Consider the first junction in the circuit where current splits

- The diagram below shows the first junction in the circuit

Step 3: Calculate the missing amount of current

- Since 10 A flows in to the junction (the total current from the battery), 10 A must flow out of the junction
- The question says that 6 A flows through ammeter A_1 so the remaining current flowing through ammeter A_2 must be:

$$10\text{ A} - 6\text{ A} = \mathbf{4\text{ A}}$$

- Therefore, **4 A** flows through ammeter A_2

Examiner Tips and Tricks

The direction of current flow is important when considering junctions in a circuit. You should remember that current flows from the **positive** terminal to the **negative** terminal of a cell / battery. This will help determine the direction current is flowing round a circuit.

Teacher only

New! Exclusive Teacher-Only Questions

- Fresh, expert-written questions
- Students can't access them
- Fair accurate tests - built fast

Test yourself Flashcards

Was this revision note helpful? Yes No

Previous Next

Course Study tools All topics

Resources

Learning Hub
Scholarship
Join
Past Papers
Solution Banks
Sitemap

Dashboard

Overview
Brand ambassador
Profile
Subscription
Settings
Log out

Company

About us
Exam Specificity
Content Quality
Promotions
Jobs
Terms
Privacy
Cookie Policy
Help and Support

Subjects

Biology
Chemistry
Physics
Maths
Geography
English Literature
Psychology
All Subjects

© Copyright 2015–2026 Save My Exams Ltd. All Rights Reserved.